SEÑORA
CENTRAL

WOMAN COLGADOR EN L 80xH130 DERECHA

ACABADOS

1. MT-11 BLACK HAMMERED TEXTURED STEEL
2. ACERO INOX SATINADO ESTANDAR REF. 2202
3. WD-03 RECLAIMED SOLID WOOD

1 FOR WOMAN

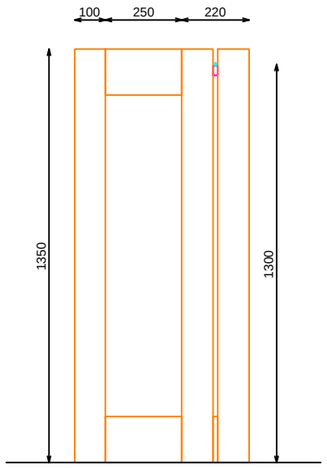

ALZADO IZQUIERDO

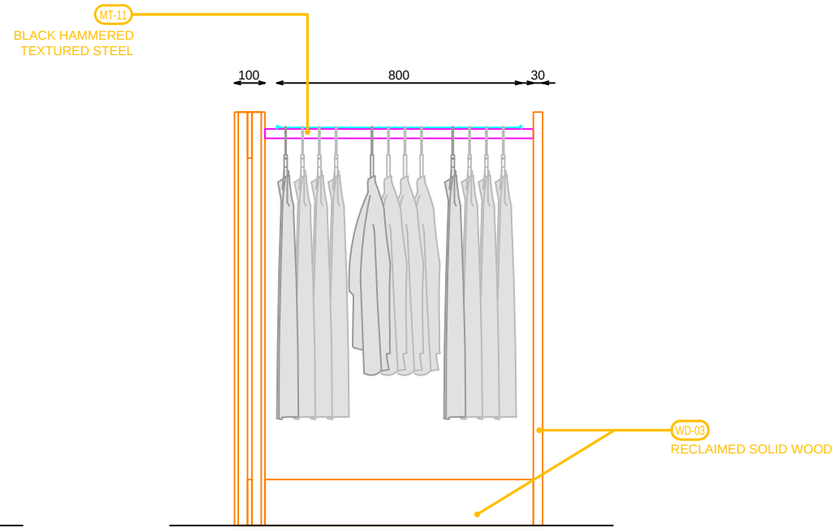

ALZADO

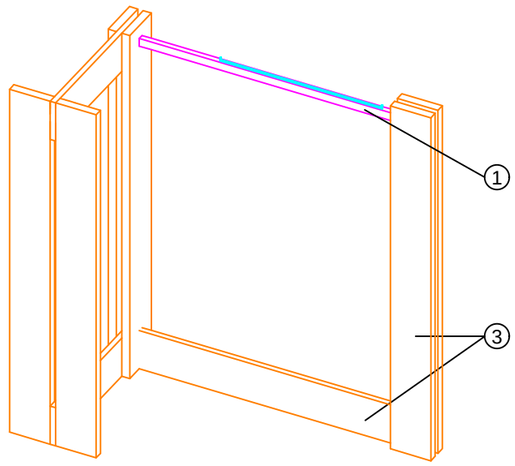

VISTA 3D

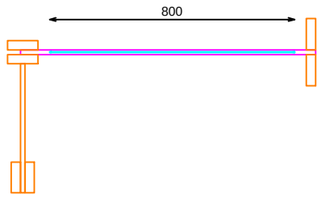

PLANTA

E: 1_20

Código: COD
Matrícula: MAT
Versión: VER
Fecha: DAT
Imagen: IMG

STUDIOZARA

S:\CAAMANOASIA\PM\FURNITURE DPTO\Zara furniture\Projects\2026\New Orders\ZARA 17140 China Huaihai\01 Client Drawing & IO\17140-extra furniture\8Z80001300.dwg, 2026/4/27 18:06:07, DWG To PDF.pc3

DESCRIBE描述	ZARA CODE	MATERIAL材料	FINISH颜色	PROCESSES工艺	UNIT WEIGHT单件重量(Kg)
8Z80001300		IRON铁/Stainless不锈钢/回收实木	防锈底漆/MT-11 BLACK HAMMERED TEXTURED STEEL /ACERO INOX SATINADO ESTANDAR REF. 2202/WD-03 RECLAIMED SOLID WOOD	cut/weld/drill/polish/paint	28.87

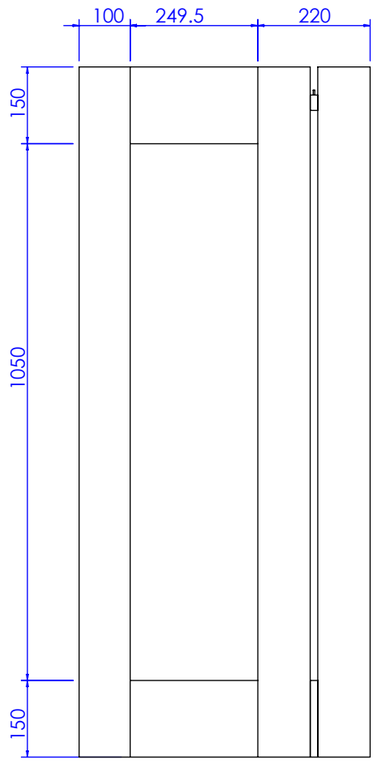

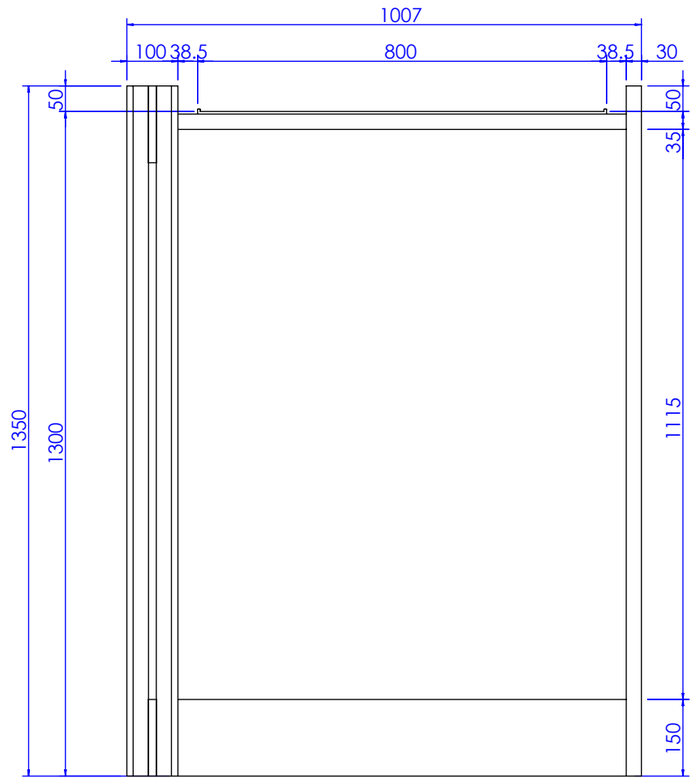

图纸按照客户图三视图所画，
与客户3D轴测图不符
加工前需要向项目确实是否按照此图生产

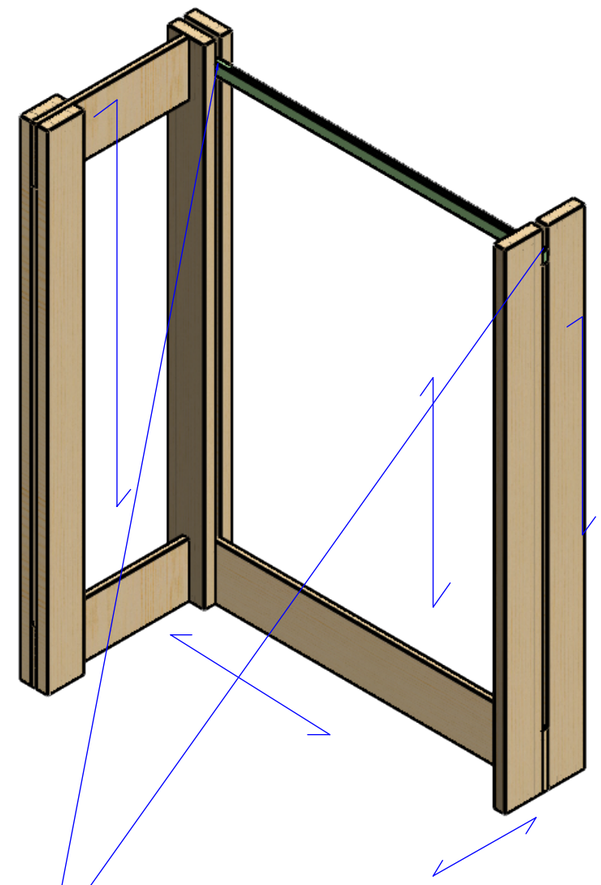

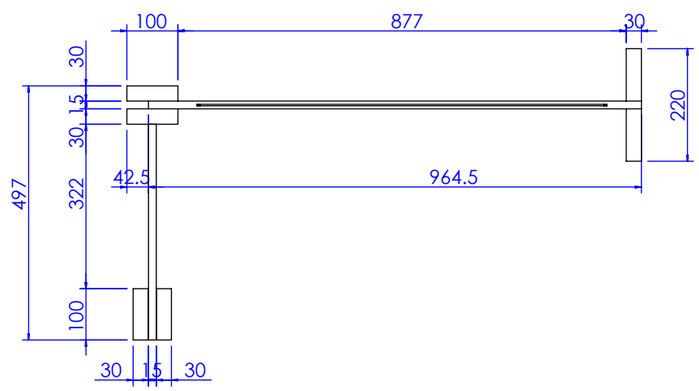

挂杆连接处包板
金属需要提前穿过木板

技术要求(Technical Requirements)：
1、供货方要相应配同色的连接件; 螺杆类连接件要装在相应位置，以防止孔位偏差;
(The supplier needs to provide the connectorand match the color;
The threaded rod must be pre-install into the correct location to avoid the deviation)
2、金属件要求无披锋，焊接牢固，无虚焊，承重部位必须满焊;
(The metal parts must be smoothly, strong welding, full weld on the loading location)
3、金属件所有见光部位不允许有影响外观效果的焊疤;
(Forbid the welding mark on the appearance surface of metal parts)
4、注意公差配合:镜子和玻璃尺寸, 需与挂臂配合的挂钩内卡口,如未注明公差按负公差0.5mm加工.
(Take note the tolerance for mirror,glass, the hook which needs to assembled with bar and so on, the unspecifed tolerance is -0.5mm.)
5、所有可见螺丝均为内六角螺丝.
(All the appearance screws must be allen screws)
6、所有镜子、玻璃、大理石4边和4角都要磨边，金属件所有边角无坡锋\无毛刺，防止伤人。
(All mirrors, glass, marble 4 sides and 4 angles need to sanding, all corners of metal furniture need to polish,no burr, prevent injuries.)
7、凡是涉及到走线的产品，供货方必须穿好电线。
(The supplier must wear all wire.)
8、供货方必须装配好由供货方生产的配套产品，例如层板托、连接件。
(the supplier must Pre assembled accessory, such as lamination, connector.)
9.所有部件焊接时要磨45°左右的斜边,辅助焊接,超过轮廓线外的焊点要磨平。

SHEET FORMAT 图纸大小 A3	UNITS单位 mm	8Z80001300 -总装	PROJECT NO.内部单号 0000/00	STORE CODE店铺号 0000
DRAWN BY制图 QiuyueWang	SCALE比例 1:12		ORDER NO.订单号 000	
ORDER DATE下单日期 00/00/00	DELIVERY DATE入库日期 00/00/00	WOMAN COLGADOR EN L 80xH130 DERECHA	ZARA	
CLIENT DRAWING图户图 Proy V.0	VERSION版本 V.0		CAAMAÑOASIA公司	
ASSEMBLED IN:组装场所 INTERIOR	DRAWING TYPE图纸类型 MANUFACTURING			

Path存储路径:E:\QIUYUEWANG\ZARA\17140店铺\8Z80001300\8Z80001300

创建日期(Created Date) 2026年4月27日 11:17:52

上次保存的日期(Last Saved Date) 2026年4月27日 17:15:28

DESCRIBE描述	ZARA CODE	MATERIAL材料	FINISH颜色	PROCESSES工艺	UNIT WEIGHT单件重量(Kg)
8Z80001300		IRON铁/Stainless不锈钢/回收实木	防锈底漆/MT-11 BLACK HAMMERED TEXTURED STEEL /ACERO INOX SATINADO ESTANDAR REF. 2202/WD-03 RECLAIMED SOLID WOOD	cut/weld/drill/polish/paint	28.87

油漆面积Paint Area：4m²
油漆颜色Paint Color：WD-03 RECLAIMED SOLID WOOD

No. 序号	Part Description 零件描述	Quantity 数量	Material 材质	Finish 颜色
1	5Z82001301	1	回收实木	WD-03 RECLAIMED SOLID WOOD
2	5Z81001302	1	IRON铁/Stainless不锈钢	防锈底漆/MT-11 BLACK HAMMERED TEXTURED STEEL /ACERO INOX SATINADO ESTANDAR REF. 2202

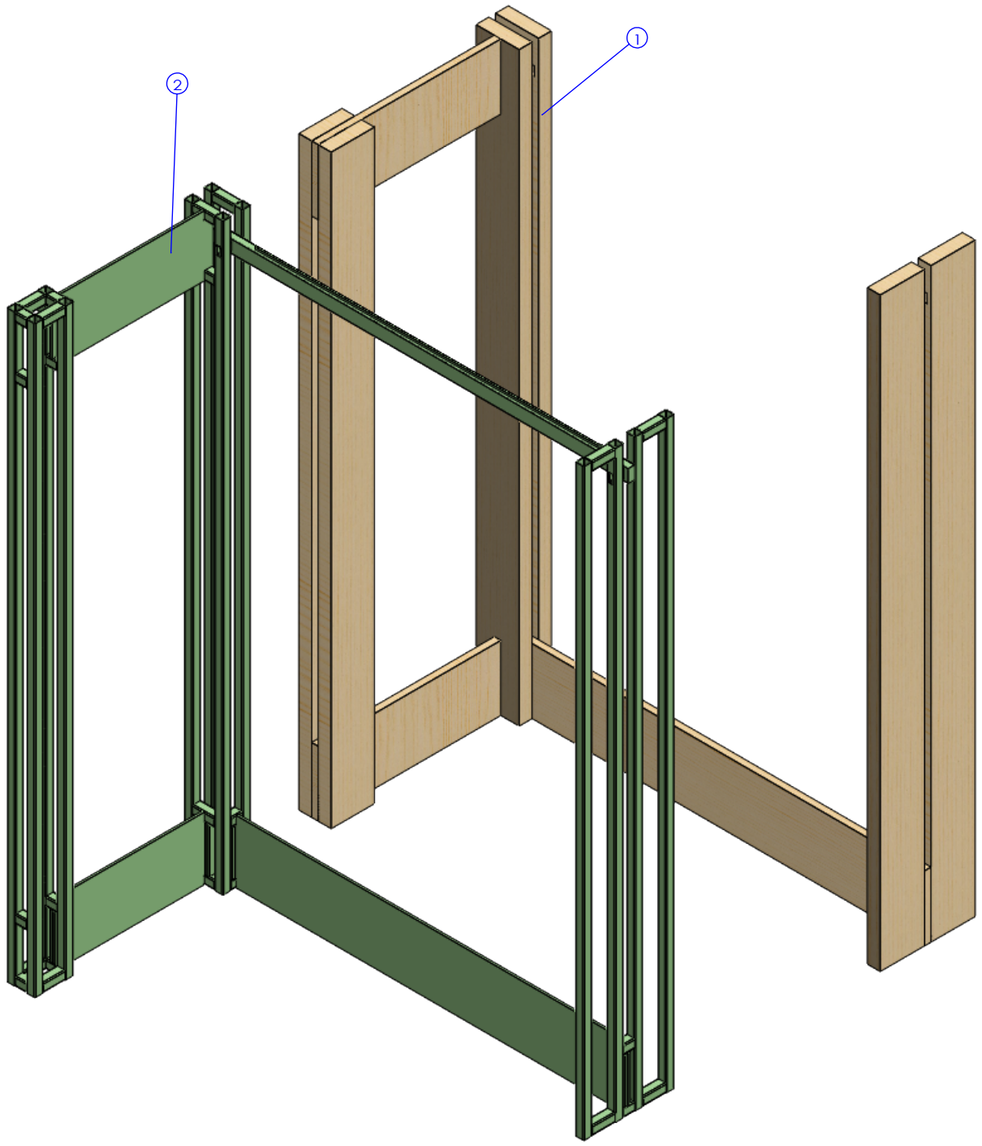

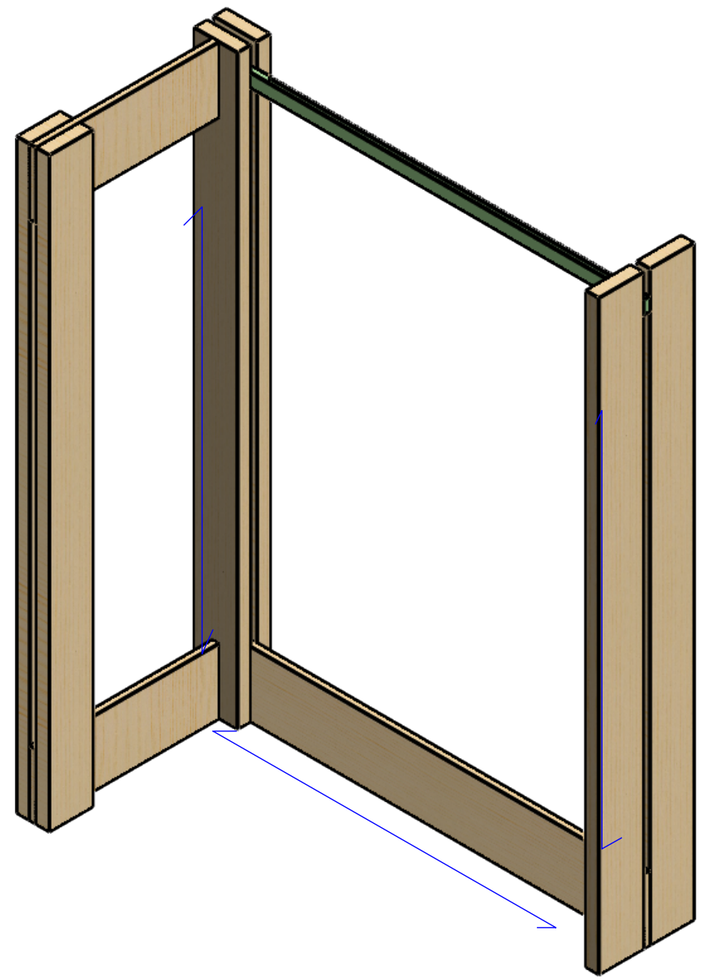

技术要求(Technical Requirements)：
1、供货方要相应配同色的连接件; 螺杆类连接件要装在相应位置，以防止孔位偏差;
(The supplier needs to provide the connectorand match the color;
The threaded rod must be pre-install into the correct location to avoid the deviation)
2、金属件要求无披锋，焊接牢固，无虚焊，承重部位必须满焊;
(The metal parts must be smoothly, strong welding, full weld on the loading location)
3、金属件所有见光部位不允许有影响外观效果的焊疤;
(Forbid the welding mark on the appearance surface of metal parts)
4、注意公差配合:镜子和玻璃尺寸，需与挂臂配合的挂构内卡口,如未注明公差按负公差0.5mm加工.
(Take note the tolerance for mirror,glass, the hook which needs to assembled with bar and so on, the unspecifed tolerance is -0.5mm.)
5、所有可见螺丝均为内六角螺丝.
(All the appearance screws must be allen screws)
6、所有镜子、玻璃、大理石4边和4角都要磨边，金属件所有边角无披锋\无毛刺，防止伤人。
(All mirrors, glass, marble 4 sides and 4 angles need to sanding, all corners of metal furniture need to polish,no burr, prevent injuries.)
7、凡是涉及到走线的产品，供货方必须穿好电线。
(The supplier must wear all wire.)
8、供货方必须装配好由供货方生产的配套产品，例如层板托、连接件。
(the supplier must Pre assembled accessory, such as lamination, connector.)
9.所有部件焊接时要磨45°左右的斜边,辅助焊接,超过轮廓线外的焊点要磨平。

SHEET FORMAT 图纸大小 A3	UNITS单位 mm	8Z80001300 -BOM	PROJECT NO.内部单号 0000/00	STORE CODE店铺号 0000
DRAWN BY制图 QiuyueWang	SCALE比例 1:10		ORDER NO.订单号 000	
ORDER DATE下单日期 00/00/00	DELIVERY DATE入库日期 00/00/00	WOMAN COLGADOR EN L 80xH130 DERECHA	ZARA	
CLIENT DRAWING图户图 Proy V.0	VERSION版本 V.0		CAAMAÑOASIA公司	
ASSEMBLED IN:组装场所 INTERIOR	DRAWING TYPE图纸类型 MANUFACTURING			

Path存储路径:E:\QIUYUEWANG\ZARA\17140店铺\8Z80001300\8Z80001300

创建日期(Created Date)
2026年4月27日 11:17:52

上次保存的日期(Last Saved Date)
2026年4月27日 17:15:28