DW-2F-01

		QTY.
2F	L1200xW1000x H400	x4

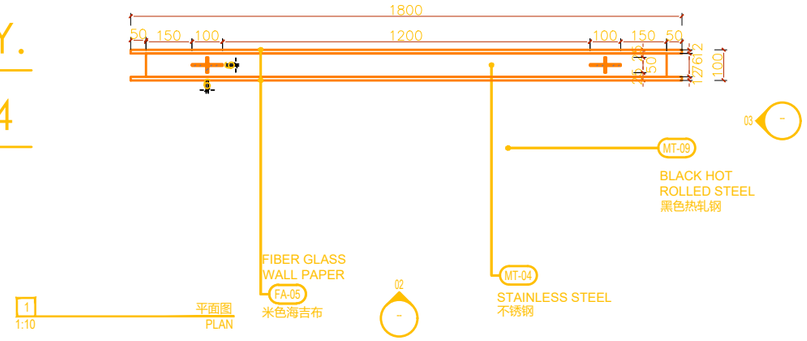

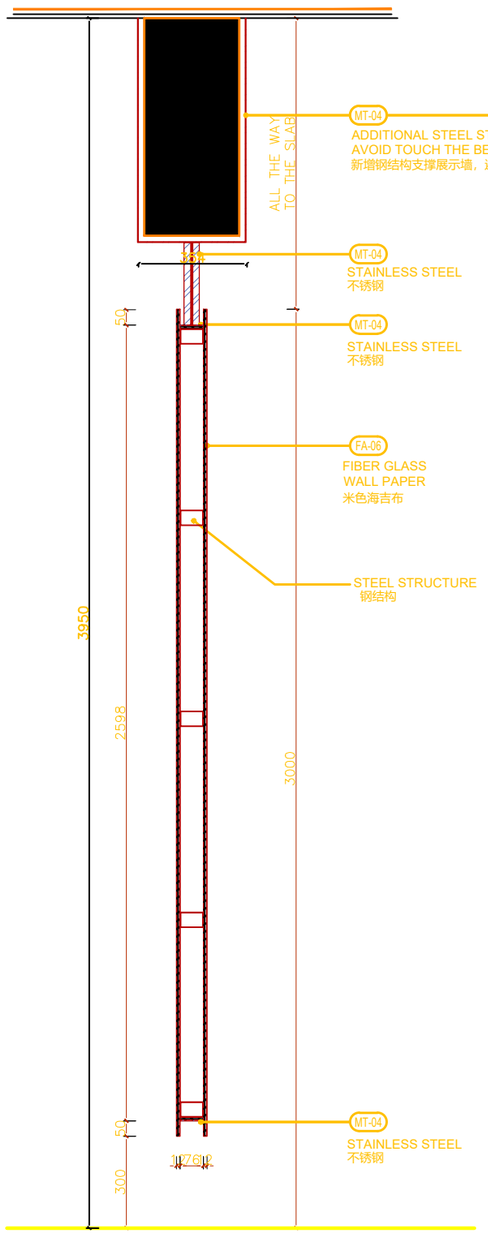

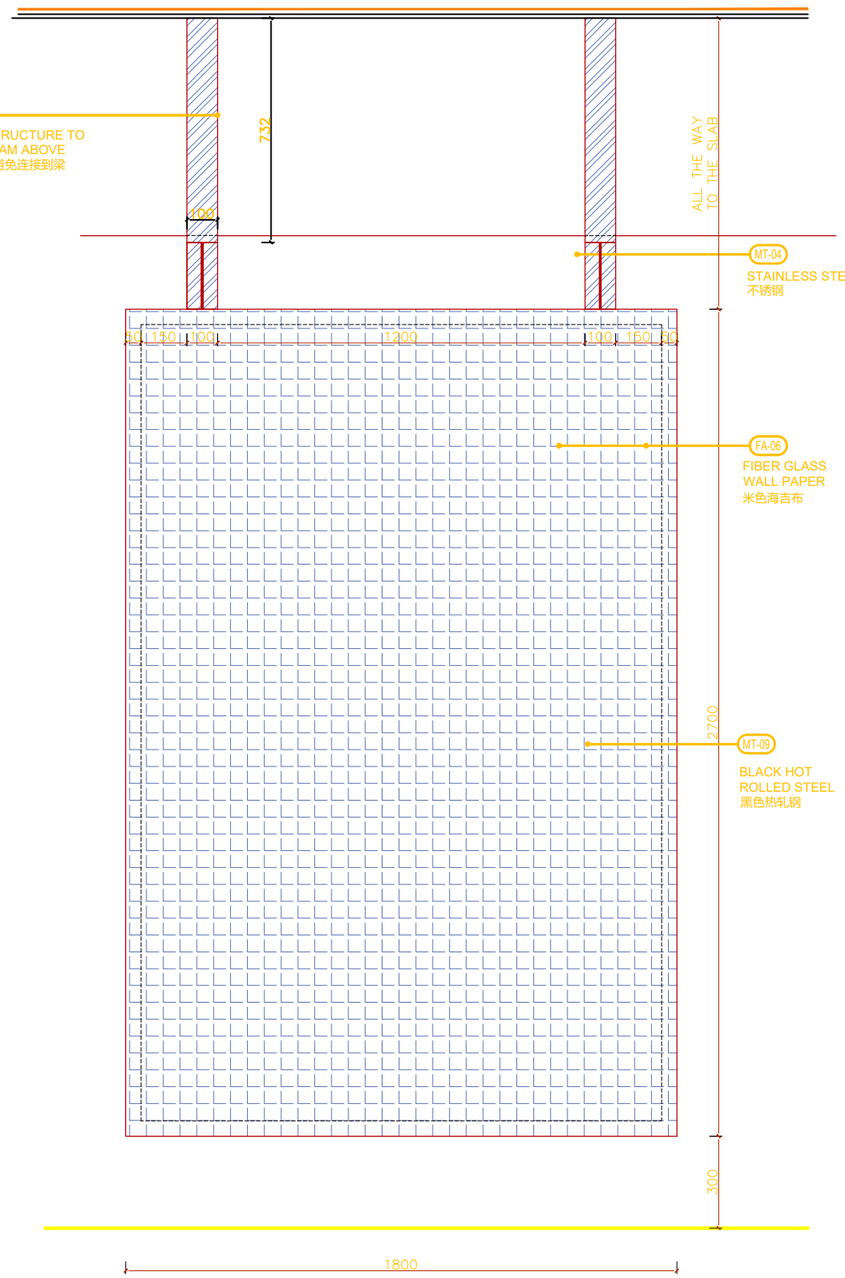

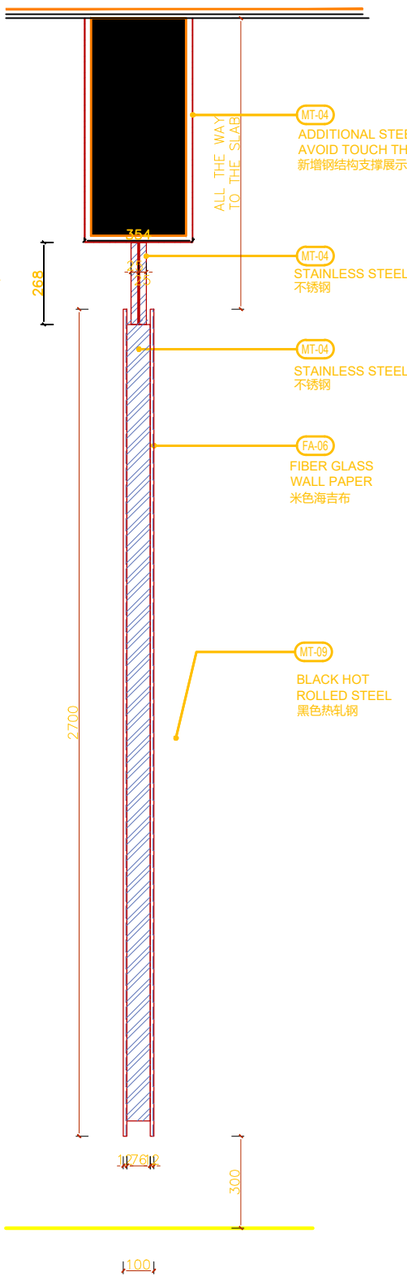

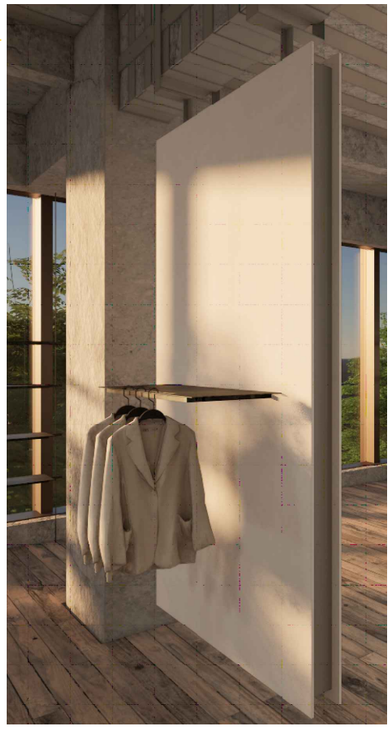

恺慕建筑设计咨询（上海）有限公司
AIM ARCHITECTURE
上海 徐汇区 汾阳路77号 5楼
5F 77 Fenyang Road, Shanghai
200031 / T: +86 21-63805995

CONDITIONS: Contractors, vendors & consultants must verify all dimensions on site and notify this Solution Centre any discrepancies prior to carry out works. Written dimensions take precedence overscaled dimensions.

承包商，建材商&施工顾问等必须在现场确认所有的尺寸，如有任何尺寸差异请在作业前通知本设计单位。未经允许，请勿擅自改动图纸。恺慕设计保留对图纸的最终解释权。

AIM architecture retains copyright on this drawing.

恺慕设计保留最终图纸版权。

客户 / CLIENT:

飒拉商业（上海）有限公司
ZARA Commercial (Shanghai)

项目名称 / PROJECT NAME:

ZARA上海淮海中路
ZARA SH HUAI HAI RD

REV.	DATE	NOTES

修正 / REVIEWED BY:

校对 / CHECKED BY:

审核 / APPROVED BY:

业主确认 / CLIENT SIGNATURE:

索引图 / KEYPLAN:

比例 / SCALE:
1:10@A1

图名 / DWG NAME:
FFE_DRAWING_2F

DW-2F-01

图纸日期 / DATE: 2026.03.13
图纸编号 / DWG NO:
I-830.18

QTY数量	DESCRIBE描述	SUPPLIER供应部门	REFERENCE参考信息	MATERIAL材料	FINISH颜色	PROCESSES工艺	UNIT WEIGHT单件重量(Kg)	TOTAL WEIGHT总重量(Kg)
	8Z70549200	SUPPLIER	REFERENCE	Stainless不锈钢/防火MDF/AL铝	MT-04-17140/FA-06-17140	cut/weld/drill/polish/paint	365.00	

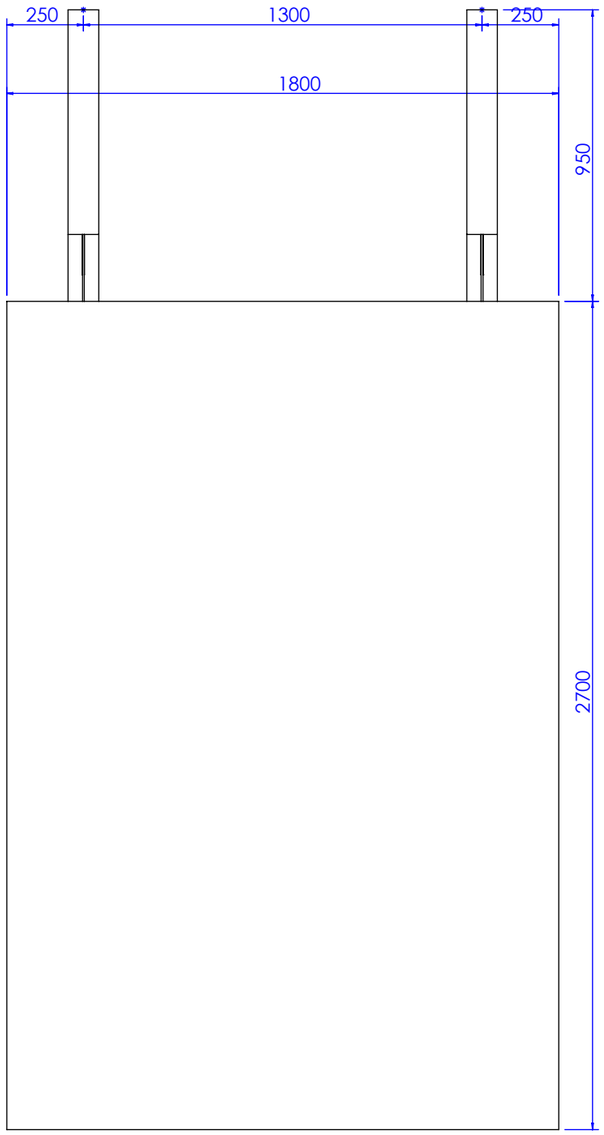

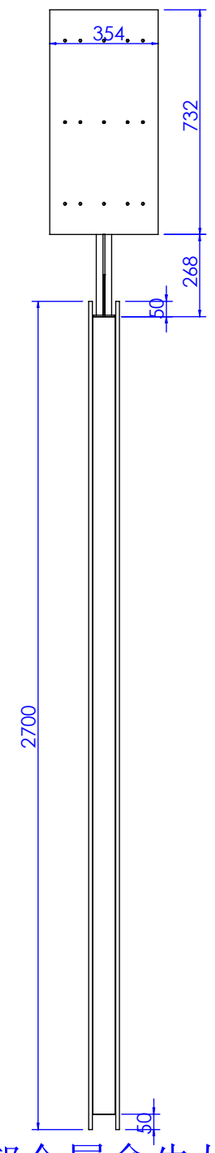

外包布匹的板材厚度及材料待定具体等待项目通知

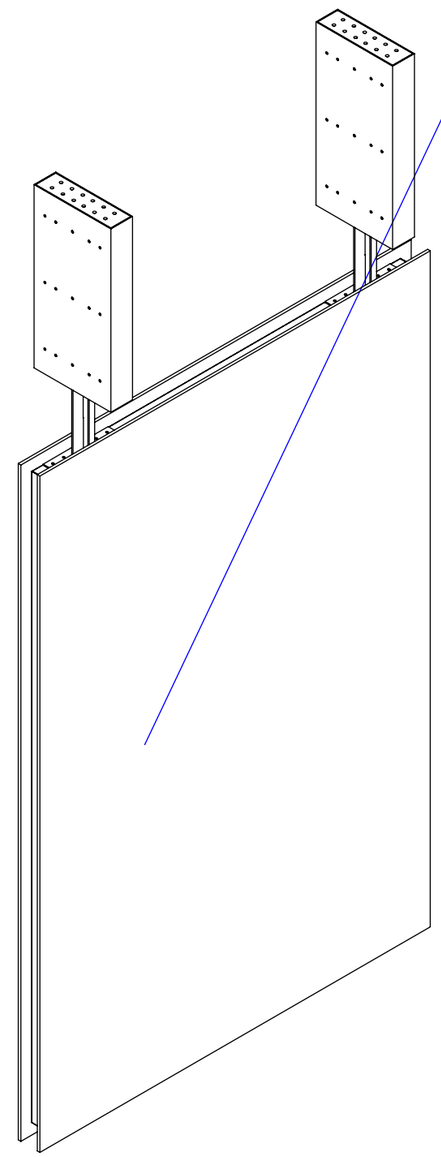

将内部金属盒先从内部固定在天花板

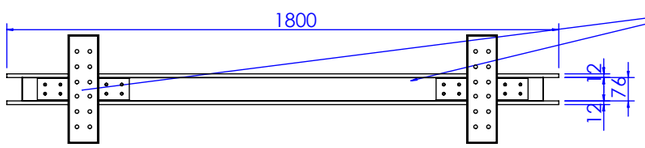

技术要求(Technical Requirements)：
1、供货方要相应配同色的连接件; 螺杆类连接件要装在相应位置，以防止孔位偏差;
(The supplier needs to provide the connectorand match the color;
The threaded rod must be pre-install into the correct location to avoid the deviation)
2、金属件要求无披锋，焊接牢固，无虚焊，承重部位必须满焊;
(The metal parts must be smoothly, strong welding, full weld on the loading location)
3、金属件所有见光部位不允许有影响外观效果的焊疤;
(Forbid the welding mark on the appearance surface of metal parts)
4、注意公差配合:镜子和玻璃尺寸, 需与挂臂配合的挂钩内卡口,如未注明公差按负公差0.5mm加工.
(Take note the tolerance for mirror,glass, the hook which needs to
assembled with bar and so on, the unspecifed tolerance is -0.5mm.)
5、所有可见螺丝均为内六角螺丝.
(All the appearance screws must be allen screws)
6、所有镜子、玻璃、大理石4边和4角都要磨边，金属件所有边角无坡锋\无毛刺，防止伤人。
(All mirrors, glass, marble 4 sides and 4 angles need to sanding, all corners of metal furniture
need to polish,no burr, prevent injuries.)
7、凡是涉及到走线的产品，供货方必须穿好电线。
(The supplier must wear all wire.)
8、供货方必须装配好由供货方生产的配套产品，例如层板托、连接件。
(the supplier must Pre assembled accessory, such as lamination, connector.)
9.所有部件焊接时要磨45°左右的斜边,辅助焊接,超过轮廓线外的焊点要磨平。

SHEET FORMAT 图纸大小 A3	UNITS单位 mm	8Z70549200 -总装	PROJECT NO.内部单号 0000/00	STORE CODE店铺号 0000
DRAWN BY制图 HaoZhang	SCALE比例 1:20		ORDER NO.订单号 000	
ORDER DATE下单日期 00/00/00	DELIVERY DATE入库日期 00/00/00	DW-2F-01-HANGING PANEL L1600XD100XH2700/FA-06 FIBER GLASS WALLPAPER MT-04 STAINLESS STEEL-17140	ZARA	
CLIENT DRAWING图户图 Proy V.0	VERSION版本 V.0		CAAMAÑOASIA公司	
ASSEMBLED IN:组装场所 INTERIOR	DRAWING TYPE图纸类型 MANUFACTURING			

Path存储路径:F:\个人\ZARA\17140\DW-2F-01-8Z70549200\8Z70549200

创建日期(Created Date) 2026年3月11日 11:30:38

上次保存的日期(Last Saved Date) 2026年3月18日 9:48:56

QTY数量	DESCRIBE描述	SUPPLIER供应部门	REFERENCE参考信息	MATERIAL材料	FINISH颜色	PROCESSES工艺	UNIT WEIGHT单件重量(Kg)	TOTAL WEIGHT总重量(Kg)
	8Z70549200	SUPPLIER	REFERENCE	Stainless不锈钢/防火MDF/AL铝	MT-04-17140/FA-06-17140	cut/weld/drill/polish/paint	365.00	

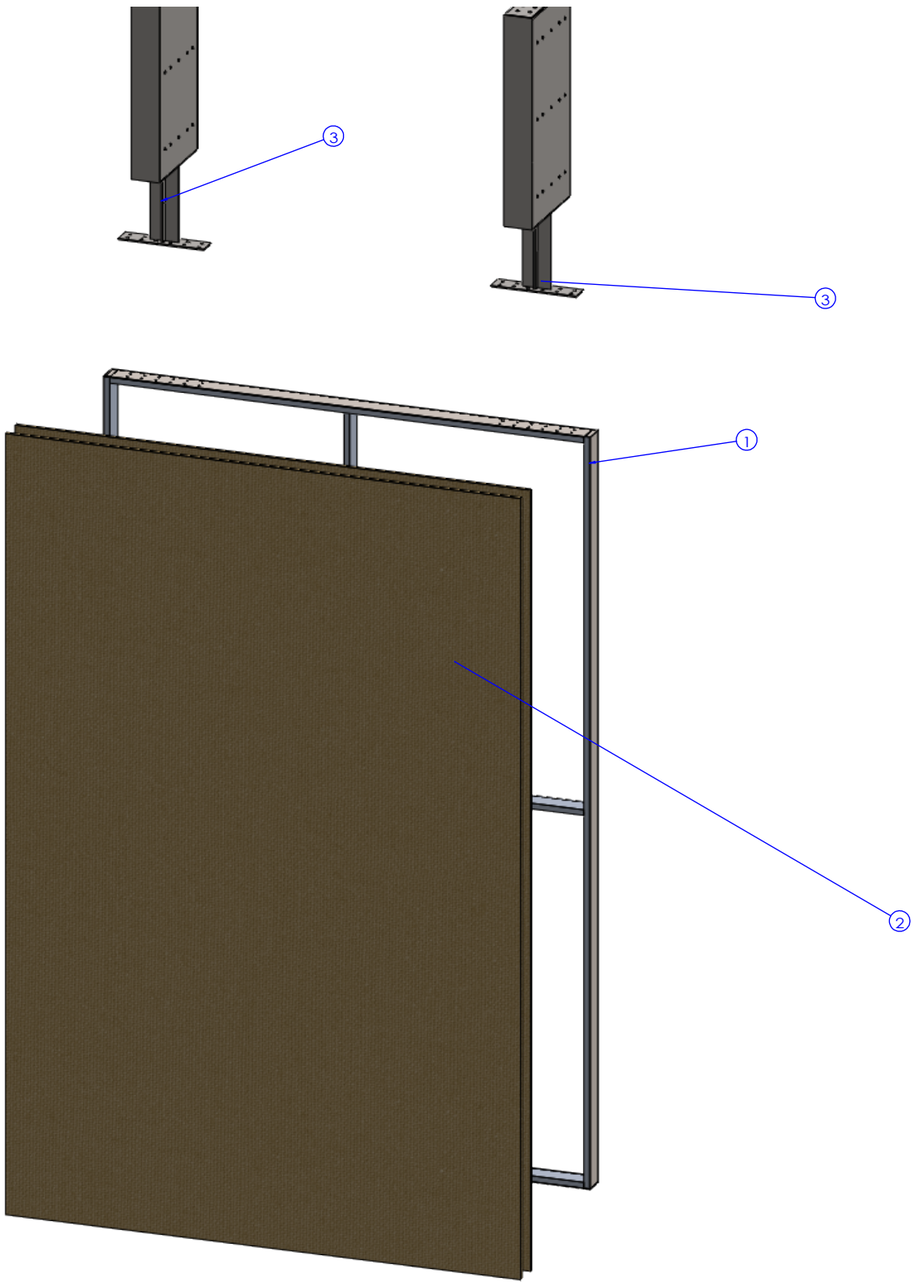

No. 序号	Part Description 零件描述	Quantity 数量	Material 材质	Finish 表面
1	5Z71549202	1	Stainless不锈钢/AL铝	MT-04-17140/原色
2	5Z72549203	1	防火MDF(待定）/织布	FA-06-17140
3	5Z71549201	2	Stainless不锈钢	MT-04-17140

技术要求(Technical Requirements)：
1、供货方要相应配同色的连接件; 螺杆类连接件要装在相应位置，以防止孔位偏差;
(The supplier needs to provide the connectorand match the color;
The threaded rod must be pre-install into the correct location to avoid the deviation)
2、金属件要求无披锋，焊接牢固，无虚焊，承重部位必须满焊;
(The metal parts must be smoothly, strong welding, full weld on the loading location)
3、金属件所有见光部位不允许有影响外观效果的焊疤;
(Forbid the welding mark on the appearance surface of metal parts)
4、注意公差配合:镜子和玻璃尺寸，需与挂臂配合的挂钩内卡口,如未注明公差按负公差0.5mm加工.
(Take note the tolerance for mirror,glass, the hook which needs to
assembled with bar and so on, the unspecifed tolerance is -0.5mm.)
5、所有可见螺丝均为内六角螺丝.
(All the appearance screws must be allen screws)
6、所有镜子、玻璃、大理石4边和4角都要磨边，金属件所有边角无坡锋\无毛刺，防止伤人。
(All mirrors, glass, marble 4 sides and 4 angles need to sanding, all corners of metal furniture
need to polish,no burr, prevent injuries.)
7、凡是涉及到走线的产品，供货方必须穿好电线。
(The supplier must wear all wire.)
8、供货方必须装配好由供货方生产的配套产品，例如层板托、连接件。
(the supplier must Pre assembled accessory, such as lamination, connector.)
9.所有部件焊接时要磨45°左右的斜边,辅助焊接,超过轮廓线外的焊点要磨平。

SHEET FORMAT 图纸大小 A3	UNITS单位 mm	8Z70549200 -BOM	PROJECT NO.内部单号 0000/00	STORE CODE店铺号 0000
DRAWN BY制图 HaoZhang	SCALE比例 1:50		ORDER NO.订单号 000	
ORDER DATE下单日期 00/00/00	DELIVERY DATE入库日期 00/00/00	DW-2F-01-HANGING PANEL L1600XD100XH2700/FA-06 FIBER GLASS WALLPAPER MT-04 STAINLESS STEEL-17140	ZARA	
CLIENT DRAWING图户图 Proy V.0	VERSION版本 V.0		CAAMAÑOASIA公司	
ASSEMBLED IN:组装场所 INTERIOR	DRAWING TYPE图纸类型 MANUFACTURING			

Path存储路径:F:\个人\ZARA\17140\DW-2F-01-8Z70549200\8Z70549200

创建日期(Created Date)
2026年3月11日 11:30:38

上次保存的日期(Last Saved Date)
2026年3月18日 9:48:56