AREA DE PERSONAL

PERIMETRAL

COCINA MODULOS ARMARIO NEVERA + ALMACENAJE

ENCHUFE
marca: JUNG
modelo: SCHUKO socket with increased contract protection
color: 4320B blanc ivoire / 245

MICROONDAS 25 L
marca: LG
modelo: LG Smart Inverter MH6535GDS
color: negro
medidas: 476x272x388 mm.

FRIGORÍFICO INTEGRABLE
marca: Balay
modelo: Frigorífico integrable
177.5 x 56
ref. 3FIE737S

ACABADOS

1. MELAMINA SONAE ARAUCO DYLIGHT REF. M6084/SMA
2. MELAMINA BLANCA
3. ACABADO PARED PINTURA AFINACIÓN CLEAF PIOMBO HM02

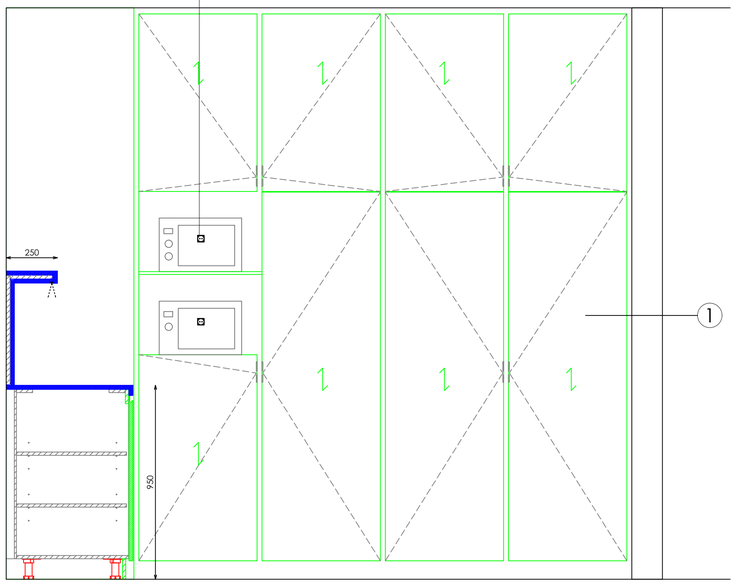

ALZADO EXTERIOR

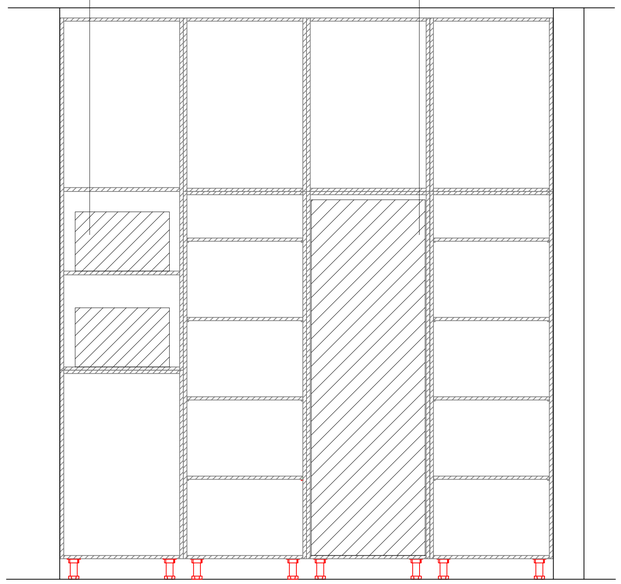

ALZADO INTERIOR

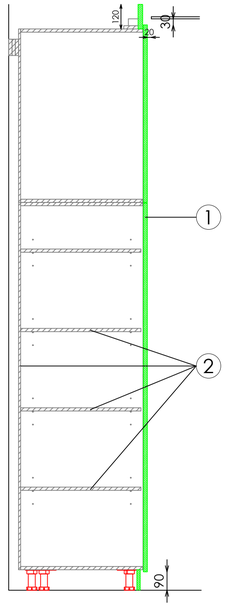

SECCIÓN ALMACENAJE

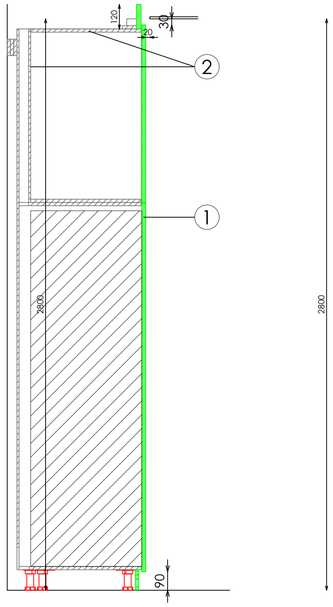

SECCIÓN NEVERA

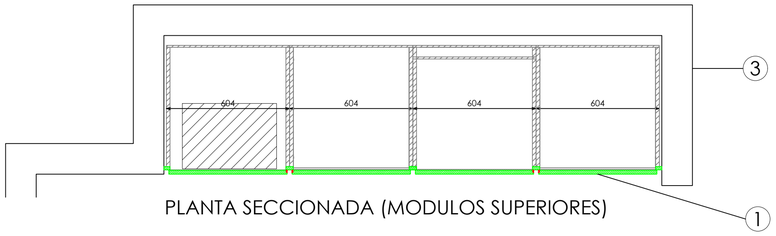

PLANTA SECCIONADA (MODULOS SUPERIORES)

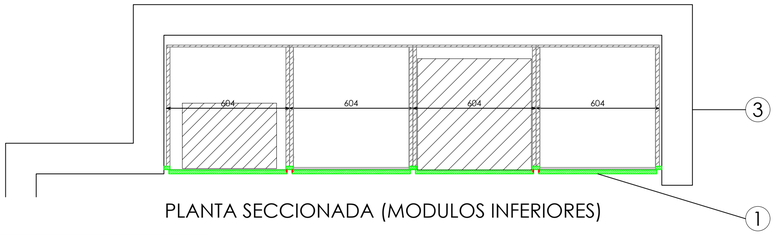

PLANTA SECCIONADA (MODULOS INFERIORES)

DETALLE UÑERO

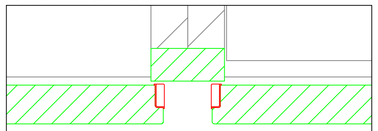

Tirador para mueble embutido
marca: HAFELE
ref. 155.01.933
acabado: RAL 7044 mate

MODULOS COCINA INDIVIDUAL

	CODIGO	DESCRIPCION	UNIDADES
23AAPMP006C	25PAAPMP0007AA	ARMARIO MODULO ALTO	2
23AAPMP007C	25PAAPMP0008AA	ARMARIO MODULO ALTO MICROONDAS	1
23AAPMP008C	25PAAPMP0009AA	ARMARIO MODULO ALTO NEVERA	1
23AAPMP009C	25PAAPMP0010AA	MODULO BAJO	0
23AAPMP010C	25PAAPMP0011AA	MODULO BAJO FREGADERO	0
23AAPMP011C	25PAAPMP0012AA	MODULO BAJO LAVAVAJILLAS	0
23AAPMP012A	25PAAPMP0013AA	ENCIMERA	0
23AAPMP013C	25PAAPMP0014AA	MODULO RECICLAJE	0

TRAZABILIDAD	22AAPMP001H

E: 1_30

Código: 25PAAPMP0003AA
Matrícula: Pp-Cocina Modulos Armario Nevera + Almacenaje 225AA
Versión: AA
Fecha: 10/03/2025
Imagen: 225

STUDIOZARA

S:\CAAMANOASIA\PM\FURNITURE DPTO\Zara furniture\Catalog\251120 CATALOG\10_Area Personal\251120_Area Personal.dwg, 2025/12/24 10:23:52, DWG To PDF.pc3

DESCRIBE描述	ZARA CODE	MATERIAL材料	FINISH颜色	PROCESSES工艺	UNIT WEIGHT单件重量(Kg)
8Z70518800		防火MDF	柜体白色三聚氰胺/门板MELAMINA SONAE ARAUCO DYLIGHT REF. M6084/SMA	cut/weld/drill/polish/paint	153.03

2026.04.22更新 新增拉直器

No. 序号	Part Description 零件描述	Quantity 数量	Material 材质	Finish 颜色
1	5Z72518802	1	防火MDF	柜体白色三聚氰胺+柜门MELAMINA SONAE ARAUCO DYLIGHT REF. M6084/SMA
2	5Z72518801	1	防火MDF	柜体白色三聚氰胺+柜门MELAMINA SONAE ARAUCO DYLIGHT REF. M6084/SMA
3	5Z72518503	1	防火MDF	MELAMINA SONAE ARAUCO DYLIGHT REF. M6084/SMA
4	5Z72518604顶部收口条	1	防火MDF	MELAMINA SONAE ARAUCO DYLIGHT REF. M6084/SMA
5	5Z72518603中间收口板	2	防火MDF	MELAMINA SONAE ARAUCO DYLIGHT REF. M6084/SMA
6	3000004081B拉直器-950	1	IRON铁	浅灰/深灰
7	3000004081B拉直器-1800	1	IRON铁	浅灰/深灰

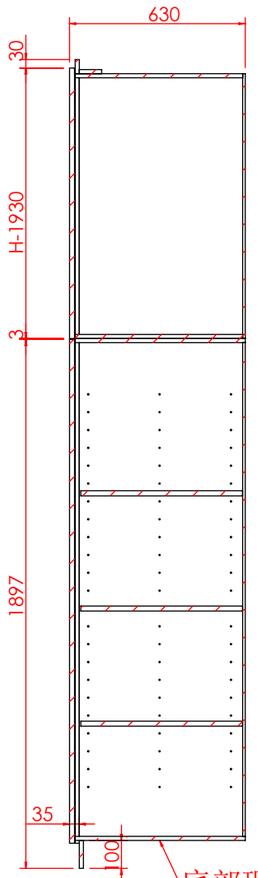

剖面 AH-AH

底部现场安装
黑色塑料调节脚

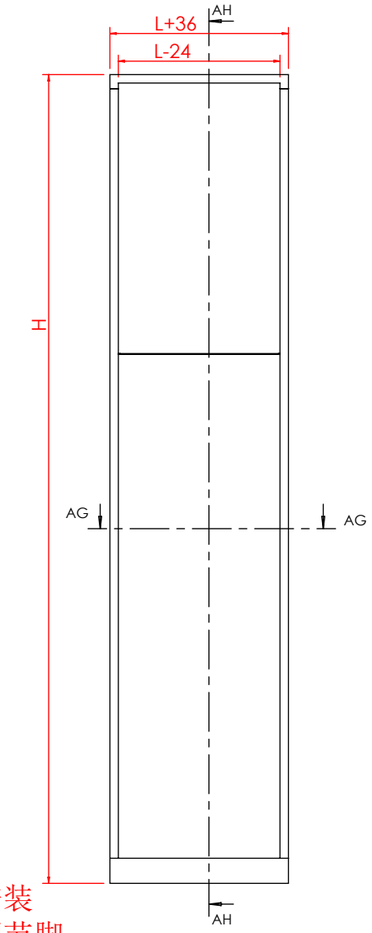

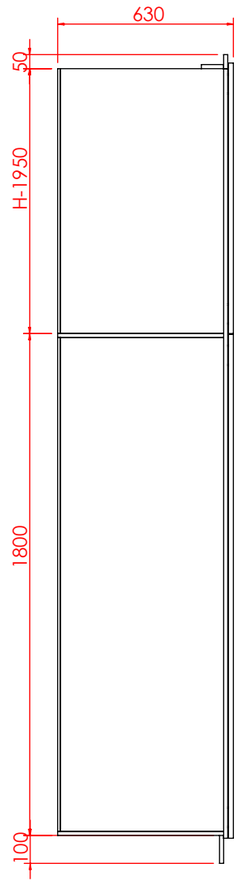

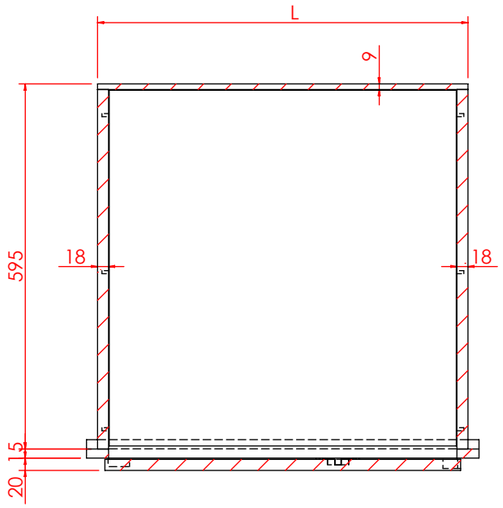

柜体用白色三聚氰胺板
柜门板MELAMINA SONAE ARAUCO DYLIGHT REF. M6084/SMA

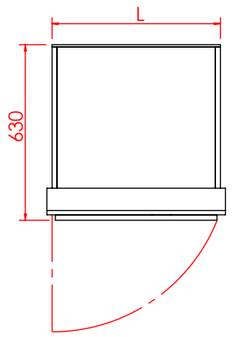

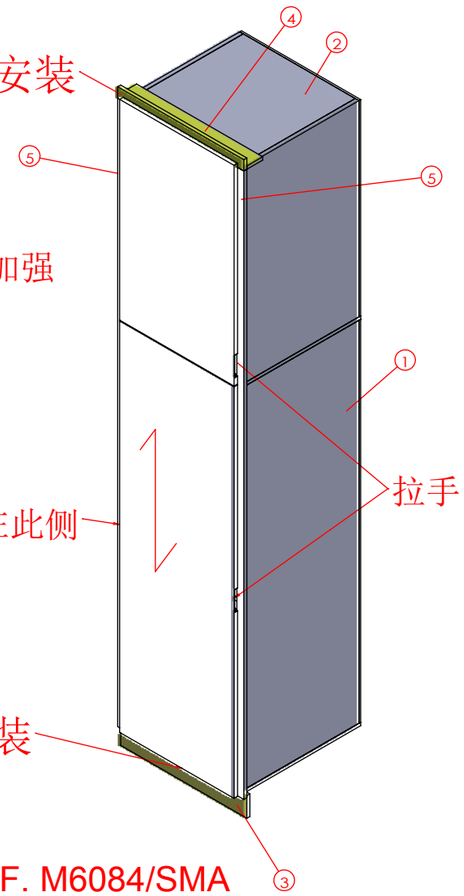

收口条现场安装

柜门背面
装拉直器加强

左开门
铰链安装在此侧

拉手

踢脚板现场安装

注意：此图示意开门方向为左开；
多套组合开门方向分左开、右开，
项目下单根据店铺平面图备注左开或者右开，
油漆面积Paint Area:3.5m2
油漆颜色Paint Color:MELAMINA SONAE ARAUCO DYLIGHT REF. M6084/SMA

天花高度：H
柜子宽度：L

技术要求(Technical Requirements)：
1、供货方要相应配同色的连接件; 螺杆类连接件要装在相应位置，以防止孔位偏差;
(The supplier needs to provide the connectorand match the color;
The threaded rod must be pre-install into the correct location to avoid the deviation)
2、金属件要求无披锋，焊接牢固，无虚焊，承重部位必须满焊;
(The metal parts must be smoothly, strong welding, full weld on the loading location)
3、金属件所有见光部位不允许有影响外观效果的焊疤;
(Forbid the welding mark on the appearance surface of metal parts)
4、注意公差配合:镜子和玻璃尺寸，需与挂臂配合的挂钩内卡口,如未注明公差按负公差0.5mm加工.
(Take note the tolerance for mirror,glass, the hook which needs to
assembled with bar and so on, the unspecifed tolerance is -0.5mm.)
5、所有可见螺丝均为内六角螺丝.
(All the appearance screws must be allen screws)
6、所有镜子、玻璃、大理石4边和4角都要磨边，金属件所有边角无坡锋\无毛刺，防止伤人。
(All mirrors, glass, marble 4 sides and 4 angles need to sanding, all corners of metal furniture
need to polish,no burr, prevent injuries.)
7、凡是涉及到走线的产品，供货方必须穿好电线。
(The supplier must wear all wire.)
8、供货方必须装配好由供货方生产的配套产品，例如层板托、连接件。
(the supplier must Pre assembled accessory, such as lamination, connector.)
9.所有部件焊接时要磨45°左右的斜边,辅助焊接,超过轮廓线外的焊点要磨平。

SHEET FORMAT 图纸大小 A3	UNITS单位 mm	8Z70518800 -总图	PROJECT NO.内部单号 0000/00	STORE CODE店铺号 0000
DRAWN BY制图 EmmaMa	SCALE比例 1:22		ORDER NO.订单号 000	
ORDER DATE下单日期 00/00/00	DELIVERY DATE入库日期 00/00/00	Kitchen Modules Cupboard Fridge + Storage 225AA-Shelf	ZARA	
CLIENT DRAWING图户图 Proy V.0	VERSION版本 V.0		CAAMAÑOASIA公司	
ASSEMBLED IN:组装场所 INTERIOR	DRAWING TYPE图纸类型 MANUFACTURING			

Path存储路径:E:\Emma\ZARA 16804\8Z70518800新款层板柜\8Z70518800

创建日期(Created Date)
星期五, 2023年3月10日 16:43:37

上次保存的日期(Last Saved Date)
星期三, 2026年4月22日 09:07:22