| QTY数量 | DESCRIBE描述 | SUPPLIER供应部门 | REFERENCE参考信息 | MATERIAL材料 | FINISH颜色 | PROCESSES工艺 | UNIT WEIGHT单件重量(Kg) | TOTAL WEIGHT总重量(Kg) |
|---|---|---|---|---|---|---|---|---|
| | 8Z70470500 | SUPPLIER | REFERENCE | 防火MDF/Stone/Stainless | 双贴白三胺/2202拉丝/深灰色火山石<br>DARK GREY LAVA STONE | cut/weld/drill/polish/paint | 92.29 | |

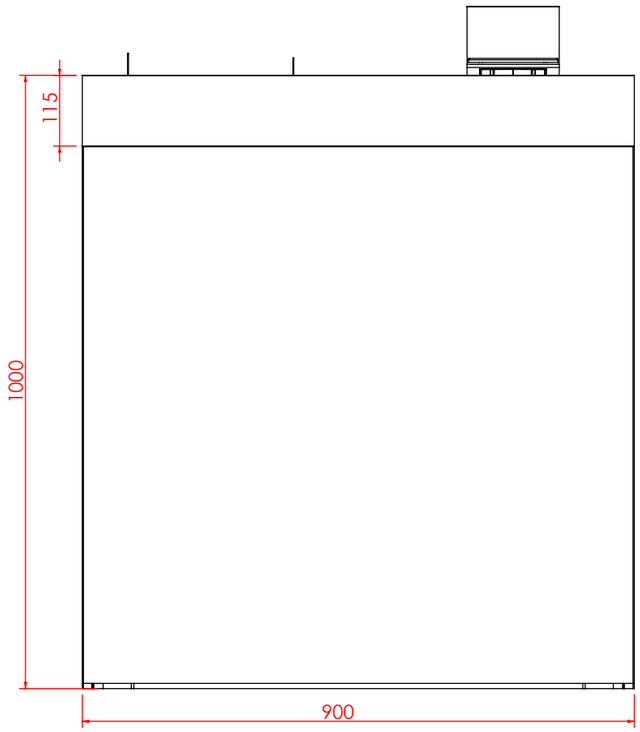


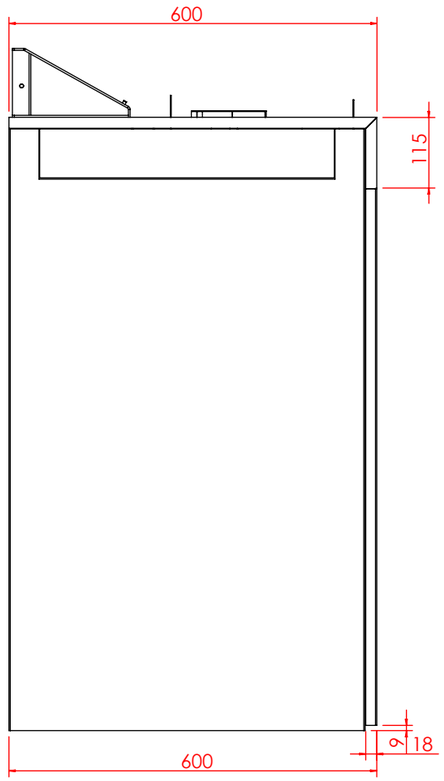


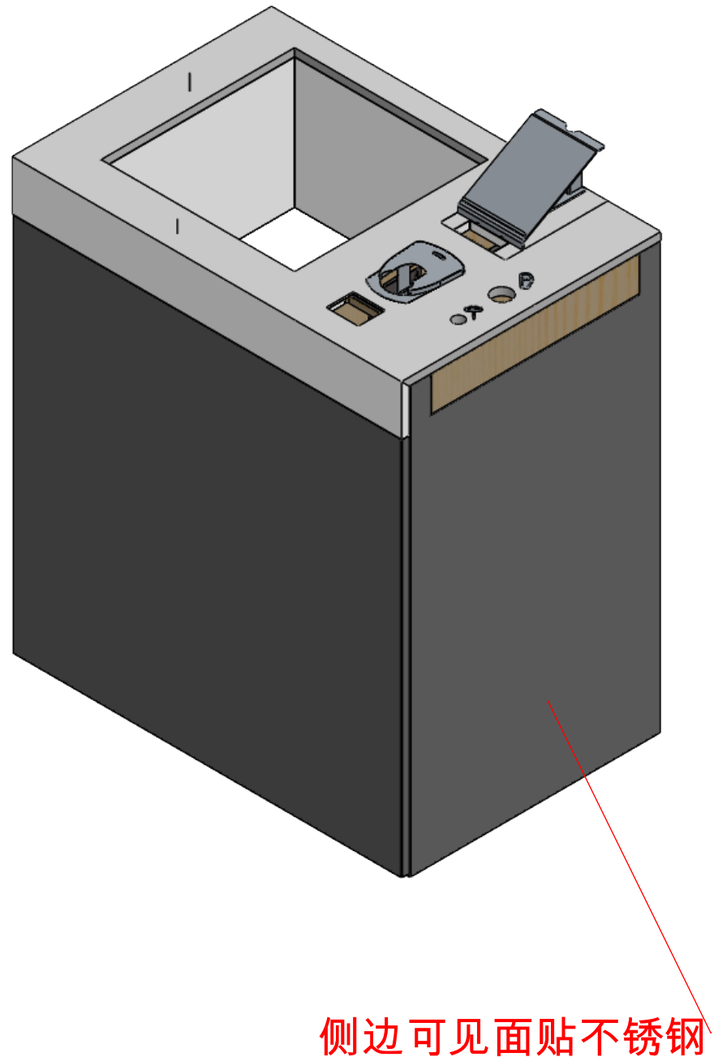


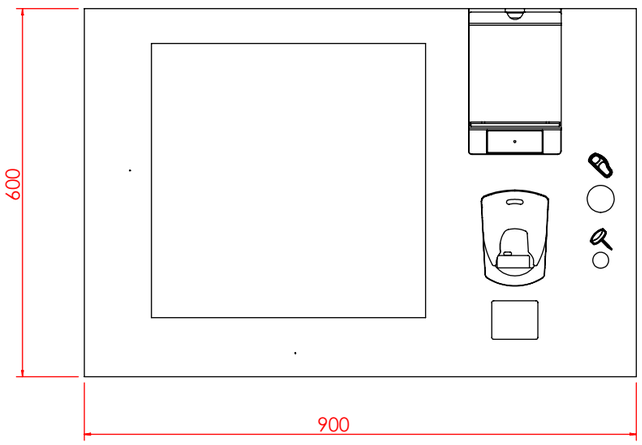


技术要求(Technical Requirements)：
1、供货方要相应配同色的连接件; 螺杆类连接件要装在相应位置，以防止孔位偏差;
(The supplier needs to provide the connectorand match the color;
The threaded rod must be pre-install into the correct location to avoid the deviation)
2、金属件要求无披锋，焊接牢固，无虚焊，承重部位必须满焊;
(The metal parts must be smoothly, strong welding, full weld on the loading location)
3、金属件所有见光部位不允许有影响外观效果的焊疤;
(Forbid the welding mark on the appearance surface of metal parts)
4、注意公差配合:镜子和玻璃尺寸, 需与挂臂配合的挂钩内卡口,如未注明公差按负公差0.5mm加工.
(Take note the tolerance for mirror,glass, the hook which needs to
assembled with bar and so on, the unspecifed tolerance is -0.5mm.)
5、所有可见螺丝均为内六角螺丝.
(All the appearance screws must be allen screws)
6、所有镜子、玻璃、大理石4边和4角都要磨边，金属件所有边角无坡锋\无毛刺，防止伤人。
(All mirrors, glass, marble 4 sides and 4 angles need to sanding, all corners of metal furniture
need to polish,no burr, prevent injuries.)
7、凡是涉及到走线的产品，供货方必须穿好电线。
(The supplier must wear all wire.)
8、供货方必须装配好由供货方生产的配套产品，例如层板托、连接件。
(the supplier must Pre assembled accessory, such as lamination, connector.)
9.所有部件焊接时要磨45°左右的斜边,辅助焊接,超过轮廓线外的焊点要磨平。

| | | | |
|---|---|---|---|
| SHEET FORMAT 图纸大小 A3 | UNITS单位 mm | 8Z70470500 -总图 | PROJECT NO.内部单号 0000/00 / STORE CODE店铺号 0000 |
| DRAWN BY制图 DevinDong | SCALE比例 1:10 | | ORDER NO.订单号 000 |
| ORDER DATE下单日期 00/00/00 | DELIVERY DATE入库日期 00/00/00 | ---- | ZARA |
| CLIENT DRAWING图户图 Proy V.0 | VERSION版本 V.0 | ---- | CAAMAÑOASIA公司 |
| ASSEMBLED IN:组装场所 INTERIOR | DRAWING TYPE图纸类型 MANUFACTURING | ---- | |

Path存储路径:*E:\01董文勇\07家具\SCO\3962\LG\8Z70470500\8Z70470500*

创建日期(Created Date)
2025年10月25日 13:06:36

上次保存的日期(Last Saved Date)
2025年10月25日 14:06:23

| QTY数量 | DESCRIBE描述 | ZARA CODE | REFERENCE参考信息 | MATERIAL材料 | FINISH颜色 | PROCESSES工艺 | UNIT WEIGHT单件重量(Kg) | TOTAL WEIGHT总重量(Kg) |
|---|---|---|---|---|---|---|---|---|
| | 8Z70470500 | | REFERENCE | 防火MDF/Stone/Stainless | 双贴白三胺/2202拉丝/深灰色火山石<br>DARK GREY LAVA STONE | cut/weld/drill/polish/paint | 92.29 | |

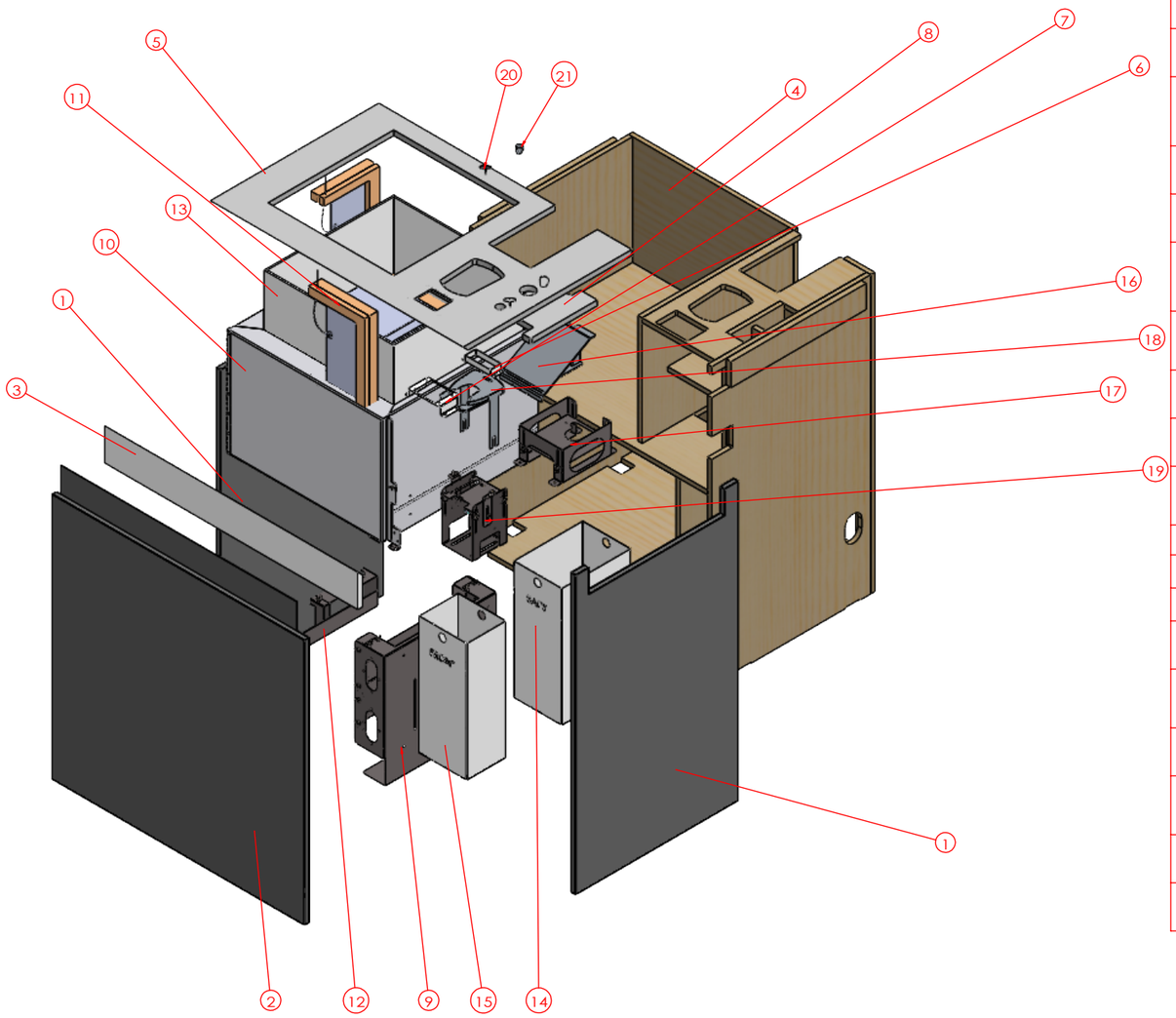


| No.<br>序号 | Part Description零件描述 | Quantity数量 | Material材质 | Finish颜色 |
|---|---|---|---|---|
| 1 | 5Z71470501 | 2 | Stainless不锈钢 | 2202 拉丝 |
| 2 | 5Z71470502 | 1 | Stainless不锈钢 | 2202 拉丝 |
| 3 | 5Z75470503 | 1 | 石头/STONE | 深灰色火山石<br>DARK GREY LAVA STONE |
| 4 | 5Z72456401 | 1 | 防火MDF | 双贴白三胺 |
| 5 | 5Z75467404 | 1 | 石头/STONE | 深灰色火山石<br>DARK GREY LAVA STONE |
| 6 | 5Z71456405 | 1 | Stainless不锈钢 | 2202 拉丝 |
| 7 | 5Z71456406 | 1 | Stainless不锈钢 | 2202 拉丝 |
| 8 | 5Z75467406 | 1 | 石头/STONE | 深灰色火山石<br>DARK GREY LAVA STONE |
| 9 | 5ZCOMPACTA05 | 1 | GALVANIZED PLATE-镀锌板 | 原色 |
| 10 | 5ZTRAY16-1 | 1 | 铝板 - Aluminium plate | 黑色油漆 |
| 11 | 5ZTRAY15 | 1 | 防火MDF | 黑色油漆 |
| 12 | 5ZTRAY11 | 1 | GALVANIZED PLATE-镀锌板 | 原色 |
| 13 | 5ZCOMPACTA03 | 1 | Krion | BLACK MIRROR 8904 |
| 14 | 5ZCOMPACTA07. | 1 | 铝板 - Aluminium plate | RAL 9005 哑光 |
| 15 | 5ZCOMPACTA06. | 1 | 铝板 - Aluminium plate | RAL 9005 哑光 |
| 16 | 5ZCOMPACTA08 | 1 | Stainless不锈钢 | 2202 |
| 17 | 5ZCOMPACTA11 | 1 | GALVANIZED PLATE-镀锌板 | 原色 |
| 18 | 5ZCOMPACTA12 | 1 | Stainless不锈钢 | 2202 |
| 19 | 5ZCOMPACTA13 | 1 | GALVANIZED PLATE-镀锌板 | 原色 |
| 20 | 5ZTRAY12-1 | 1 | Stainless不锈钢 | 2202 |
| 21 | 5ZTRAY12-2 | 1 | Stainless不锈钢 | 2202 |

技术要求(Technical Requirements)：
1、供货方要相应配同色的连接件; 螺杆类连接件要装在相应位置，以防止孔位偏差;
(The supplier needs to provide the connectorand match the color;
The threaded rod must be pre-install into the correct location to avoid the deviation)
2、金属件要求无披锋，焊接牢固，无虚焊，承重部位必须满焊;
(The metal parts must be smoothly, strong welding, full weld on the loading location)
3、金属件所有见光部位不允许有影响外观效果的焊疤;
(Forbid the welding mark on the appearance surface of metal parts)
4、注意公差配合:镜子和玻璃尺寸，需与挂臂配合的挂钩内卡口,如未注明公差按负公差0.5mm加工.
(Take note the tolerance for mirror,glass, the hook which needs to
assembled with bar and so on, the unspecifed tolerance is -0.5mm.)
5、所有可见螺丝均为内六角螺丝.
(All the appearance screws must be allen screws)
6、所有镜子、玻璃、大理石4边和4角都要磨边，金属件所有边角无披锋\无毛刺，防止伤人。
(All mirrors, glass, marble 4 sides and 4 angles need to sanding, all corners of metal furniture
need to polish,no burr, prevent injuries.)
7、凡是涉及到走线的产品，供货方必须穿好电线。
(The supplier must wear all wire.)
8、供货方必须装配好由供货方生产的配套产品，例如层板托、连接件。
(the supplier must Pre assembled accessory, such as lamination, connector.)
9.所有部件焊接时要磨45°左右的斜边,辅助焊接,超过轮廓线外的焊点要磨平。

| | | | | |
|---|---|---|---|---|
| SHEET FORMAT 图纸大小 A3 | UNITS单位 mm | 8Z70470500 -爆炸 | PROJECT NO.内部单号 0000/00 | STORE CODE店铺号 0000 |
| DRAWN BY制图 DevinDong | SCALE比例 1:10 | | ORDER NO.订单号 000 | |
| ORDER DATE下单日期 00/00/00 | DELIVERY DATE入库日期 00/00/00 | | ZARA | |
| CLIENT DRAWING图户图 Proy V.0 | VERSION版本 V.0 | | CAAMAÑOASIA公司 | |
| ASSEMBLED IN:组装场所 INTERIOR | DRAWING TYPE图纸类型 MANUFACTURING | | | |

Path存储路径:E:\01董文勇\07家具\SCO\3962\LG\8Z70470500\8Z70470500

创建日期(Created Date)
2025年10月25日 13:06:36

上次保存的日期(Last Saved Date)
2025年10月25日 14:06:23