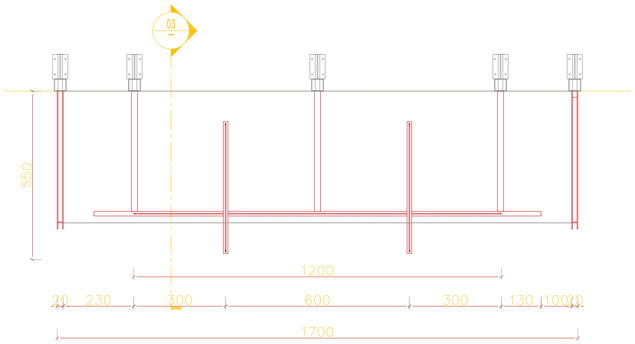

1 平面图
1:10 PLAN

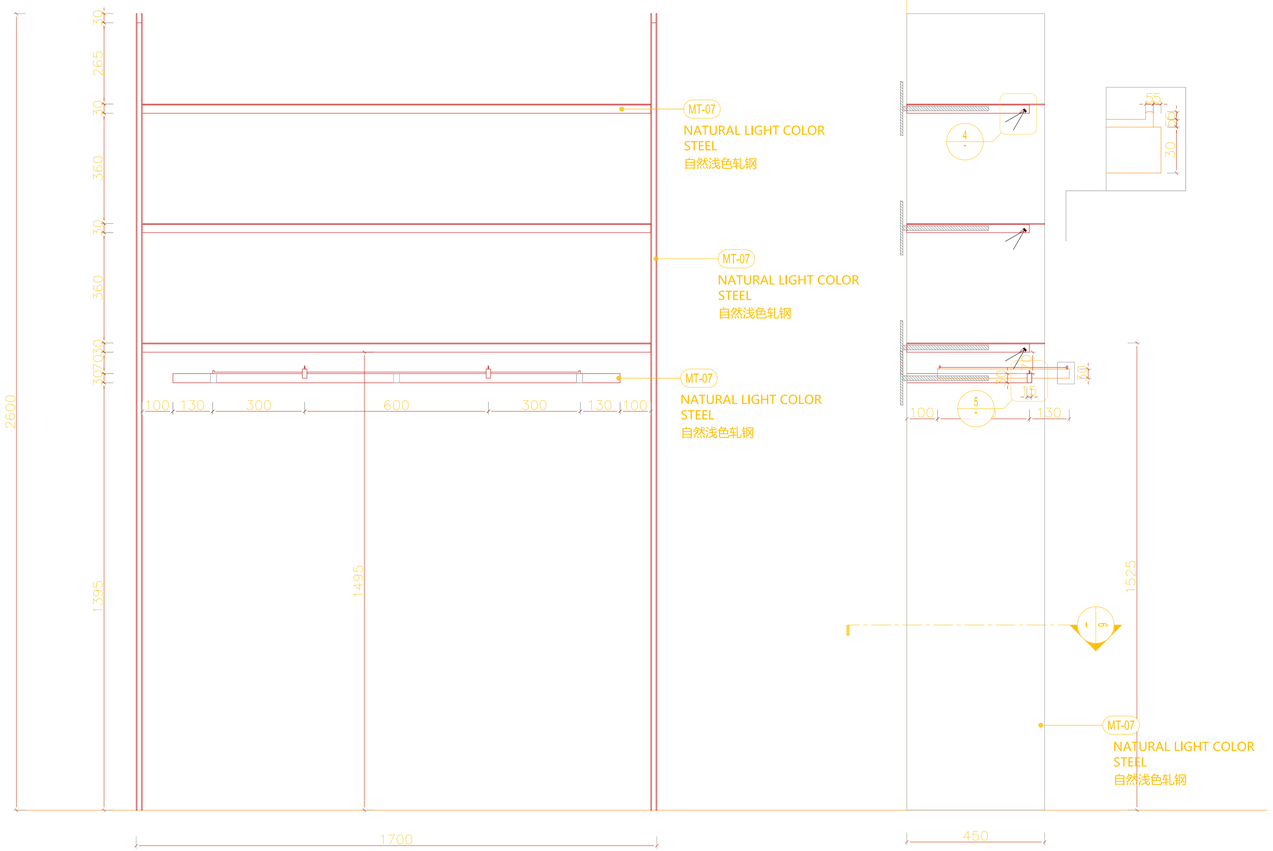

2 正立面
1:10 FRONT ELEVATION

3 侧立面
1:10 SIDE ELEVATION

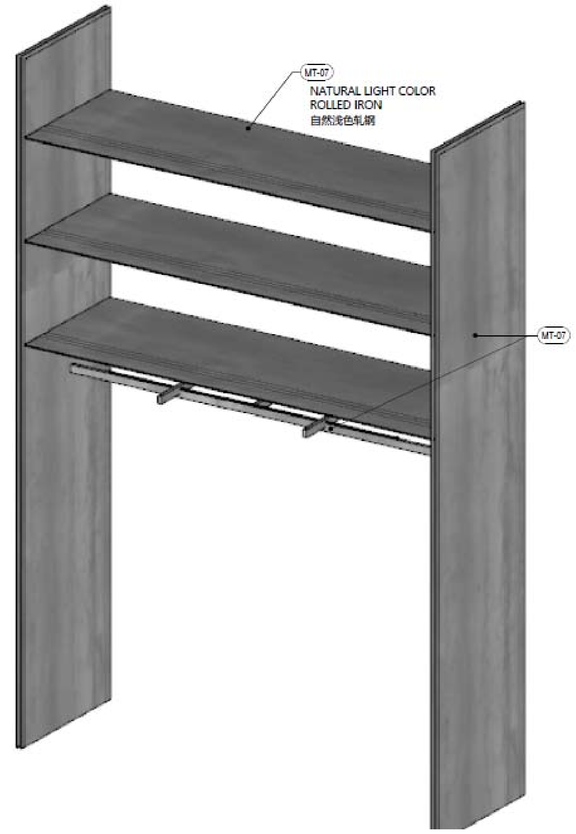

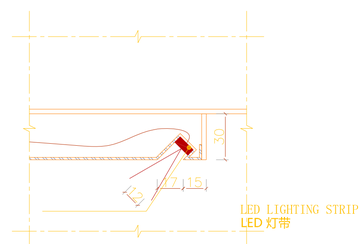

4 节点
1:2 DETAIL

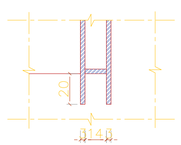

6 节点
1:2 DETAIL

5 节点
1:2 DETAIL

MAN -	BAR 1200	QTY.
LG	TREND, SOPHISTICATED	-
B1	URBAN & ZERO	x1

8Z70423400

恺慕建筑设计咨询（上海）有限公司
AIM ARCHITECTURE
上海 徐汇区 汾阳路77号 5楼
5F 77 Fenyang Road, Shanghai
200031 / T: +86 21-63805995

CONDITIONS: Contractors, vendors & consultants must verify all dimensions on site and notify this Solution Centre any discrepancies prior to carry out works. Written dimensions take precedence overscaled dimensions.

承包商、建材商&施工顾问等必须在现场确认所有的尺寸，如有任何尺寸差异请在作业前通知本设计单位。未经允许，请勿擅自改动图纸，恺慕设计保留对图纸的最终解释权。

AIM architecture retains copyright on this drawing.

恺慕设计保留最终图纸版权。

客户 / CLIENT:

筑拉商业（上海）有限公司
ZARA Commercial (Shanghai) Co., Ltd.

项目名称 / PROJECT NAME:

ZARA上海南京东路店
ZARA SH NJE STORE

REV.	DATE	NOTES
-	-	-
-	-	-
-	-	-
-	-	-
-	-	-
-	-	-
-	-	-

修正 / REVIEWED BY:

校对 / CHECKED BY:

审核 / APPROVED BY:

业主确认 / CLIENT SIGNATURE:

索引图 / KEYPLAN:

比例 / SCALE:
1:10@A1

图名 / DWG NAME:
BC-B1-05

图纸日期 / DATE: 2025.09.17
图纸编号 / DWG NO:
I-850.21

S:\CAAMANOASIA\PM\FURNITURE DPTO\Zara furniture\Projects\2025\New Orders\ZARA 3962 China ShangHai NanJing East Road\01 Client Drawing & IO\2025-9-17\20250917_AIM_Zara SH NJE_FFE DRAWING MAN_LG+B1-with 8Z code.dwg