Numbers 1-29
(Fitting Booths)

Height: 100mm
Deep: 50mm

1 2 3 4 5 6

7 8 9 10 11 12

13 14 15 16 17 18

19 20 21 22 23 24

25 26 27 28 29

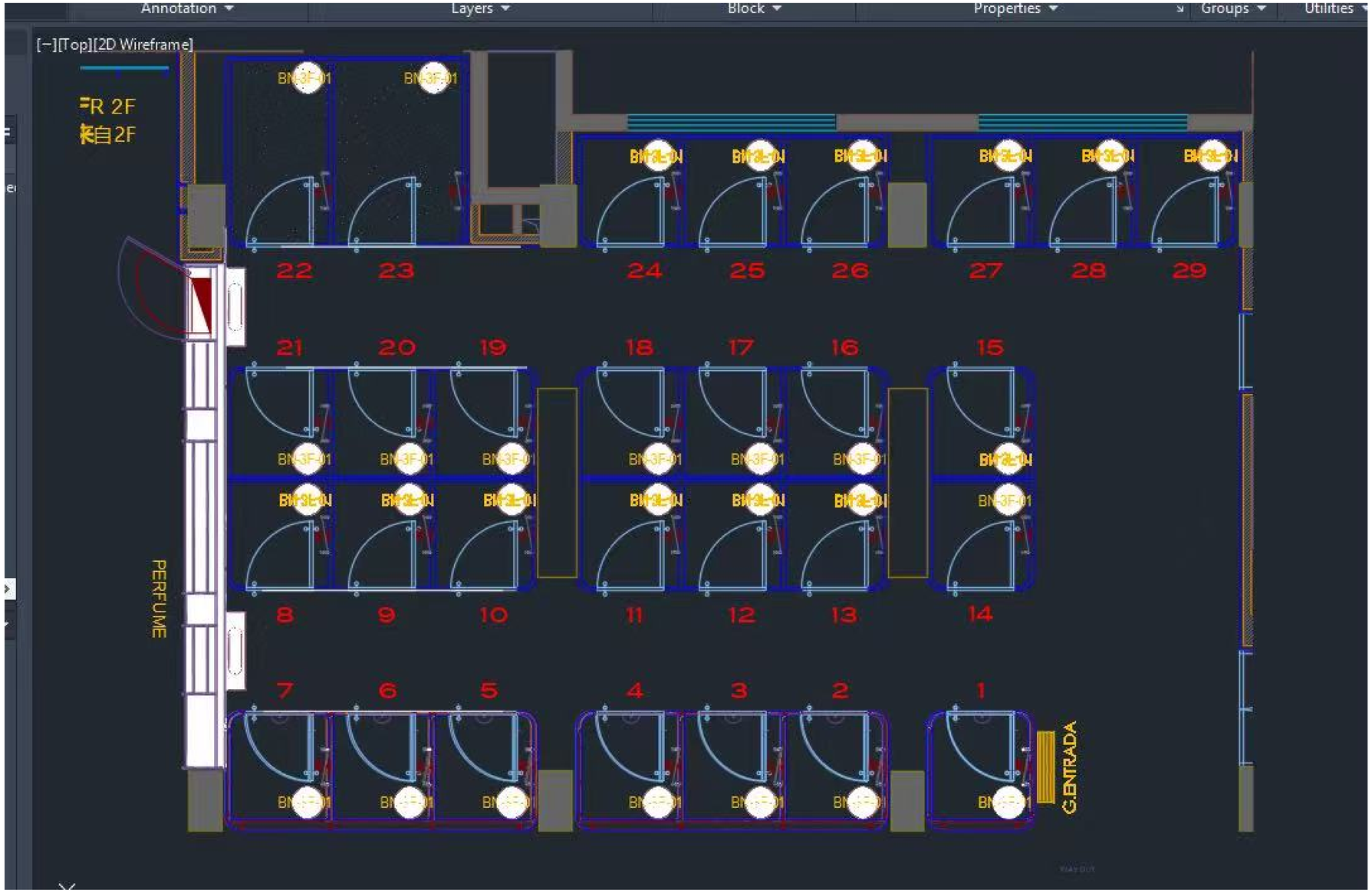
Annotation
Layers
Block
Properties
Groups
Utilities
[−][Top][2D Wireframe]
R 2F
自2F
22
23
24
25
26
27
28
29
21
20
19
18
17
16
15
8
9
10
11
12
13
14
7
6
5
4
3
2
1
PERFUME
G.ENTRADA

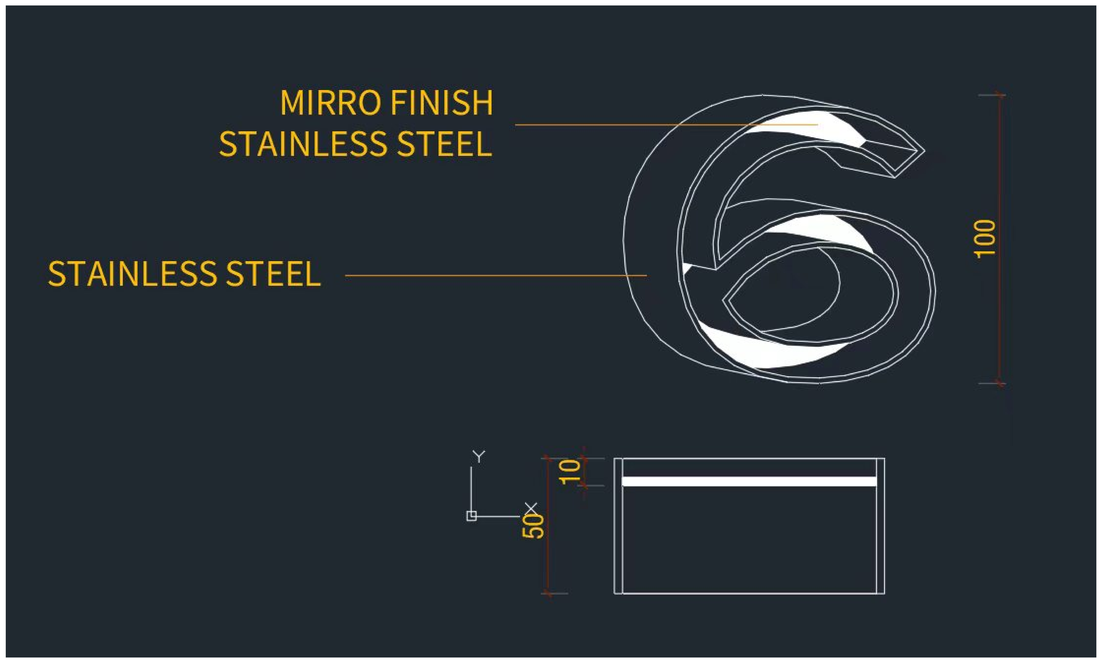
MIRRO FINISH
STAINLESS STEEL
STAINLESS STEEL
100
10
50